This drawing is the exclusive property of mbo Osswald GmbH & Co KG. Communication, reproduction and disclosure to third-parties (even if only partial) are prohibited. Any contravention will result in liability for compensation.

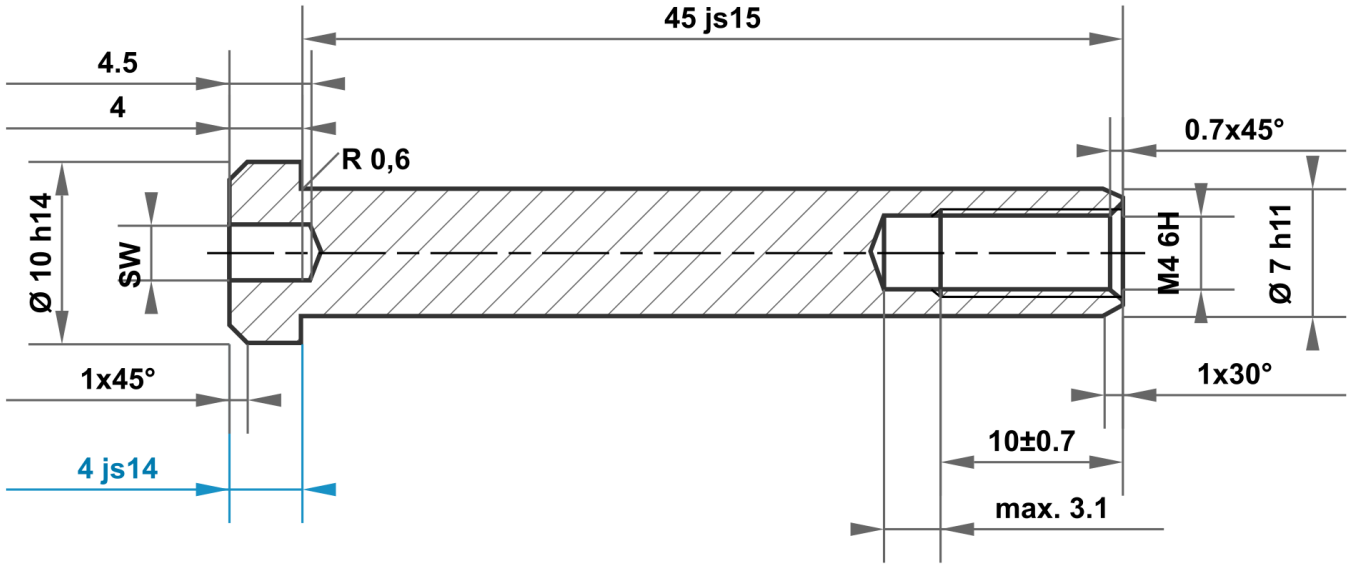

45 js15	45.500 44.500
7 h11	7.000 6.910
10 h14	10.000 9.640
4 js14	4.150 3.850

Permitted deviation for dimensions without tolerance specification
ISO 2768-m for linear and angular dimensions
ISO 2768-0.6 for symmetry

Surface: electr. galvanised white

Scale | Weight

Material: 1.0715 / 1.0718 according to DIN EN 10277

					Date	Name
				Drawn	28.10.2025	mboShop
				Checked		
				Standard		
A	Drawing created	28.10.2025	eShop			
Status	Changes	Date	Name			

mbo Osswald GmbH & Co KG
Steingasse 13
97900 Kuelsheim-Steinbach
Germany

Identifier

Sleeve nut

Article no
KT111761667637

A4

Replacement for:

Replaced by: