This drawing is the exclusive property of mbo Osswald GmbH & Co KG. Communication, reproduction and disclosure to third-parties (even if only partial) are prohibited. Any contravention will result in liability for compensation.

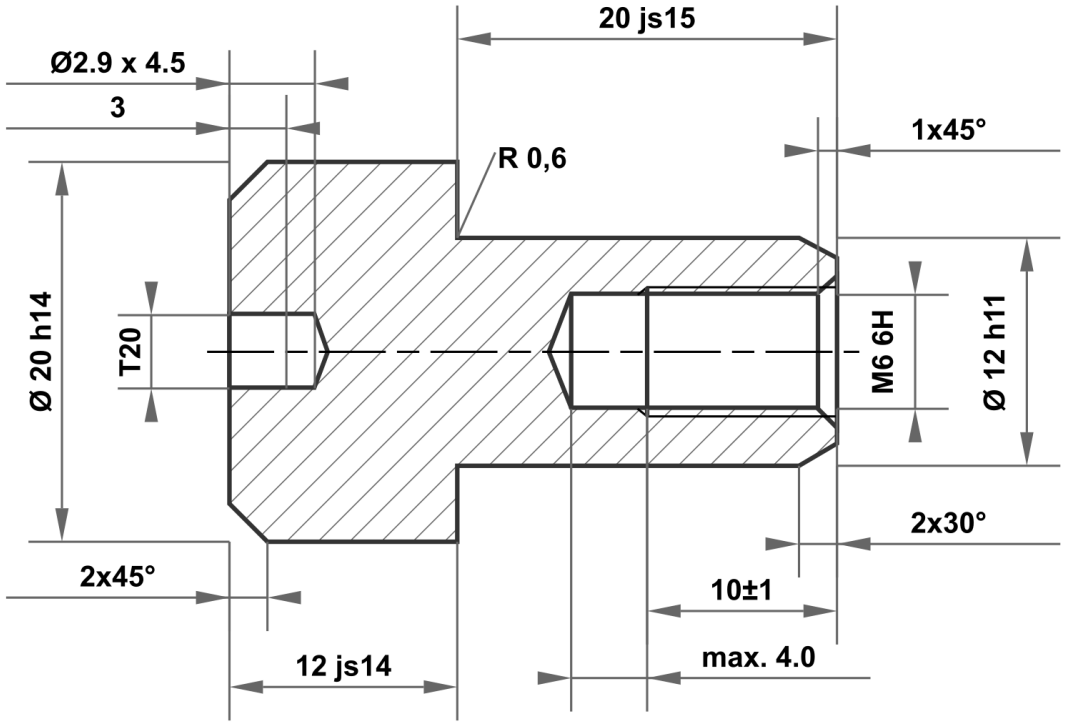


| | |
|---|---|
| 20 js15 | 20.420<br>19.580 |
| 12 h11 | 12.000<br>11.890 |
| 20 h14 | 20.000<br>19.480 |
| 12 js14 | 12.215<br>11.785 |

Permitted deviation for dimensions without tolerance specification
ISO 2768-m for linear and angular dimensions
ISO 2768-0.6 for symmetry

Surface: electr. galvanised white

Scale

Weight

Material: 1.0715 / 1.0718 according to DIN EN 10277

| | | | | | Date | Name |
|---|---|---|---|---|---|---|
| | | | | Drawn | 24.09.2025 | mboShop |
| | | | | Checked | | |
| | | | | Standard | | |
| A | Drawing created | 24.09.2025 | eShop | | | |
| Status | Changes | Date | Name | | | |

Identifier

Sleeve nut

Article no

KT381758695642

A4

mbo Osswald GmbH & Co KG
Steingasse 13
97900 Kuelsheim-Steinbach
Germany

Replacement for:

Replaced by: