This drawing is the exclusive property of mbo Osswald GmbH & Co KG. Communication, reproduction and disclosure to third-parties (even if only partial) are prohibited. Any contravention will result in liability for compensation.

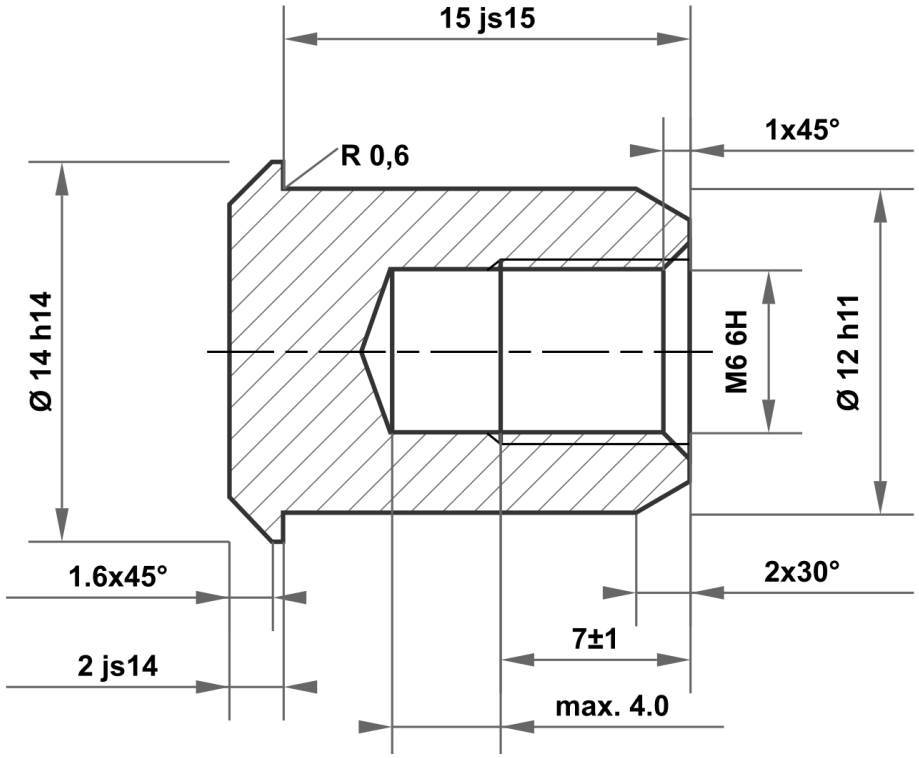

15 js15	15.350 14.650
12 h11	12.000 11.890
14 h14	14.000 13.570
2 js14	2.125 1.875

Permitted deviation for dimensions without tolerance specification
ISO 2768-m for linear and angular dimensions
ISO 2768-0.6 for symmetry

Surface: electr. galvanised white

Scale | Weight

Material: 1.0715 / 1.0718 according to DIN EN 10277

					Date	Name
				Drawn	29.08.2025	mboShop
				Checked		
				Standard		
A	Drawing created	29.08.2025	eShop			
Status	Changes	Date	Name			

mbo Osswald GmbH & Co KG
Steingasse 13
97900 Kuelsheim-Steinbach
Germany

Identifier

Sleeve nut

Article no
KT561756467201

A4

Replacement for:

Replaced by: