This drawing is the exclusive property of mbo Osswald GmbH & Co KG. Communication, reproduction and disclosure to third-parties (even if only partial) are prohibited. Any contravention will result in liability for compensation.

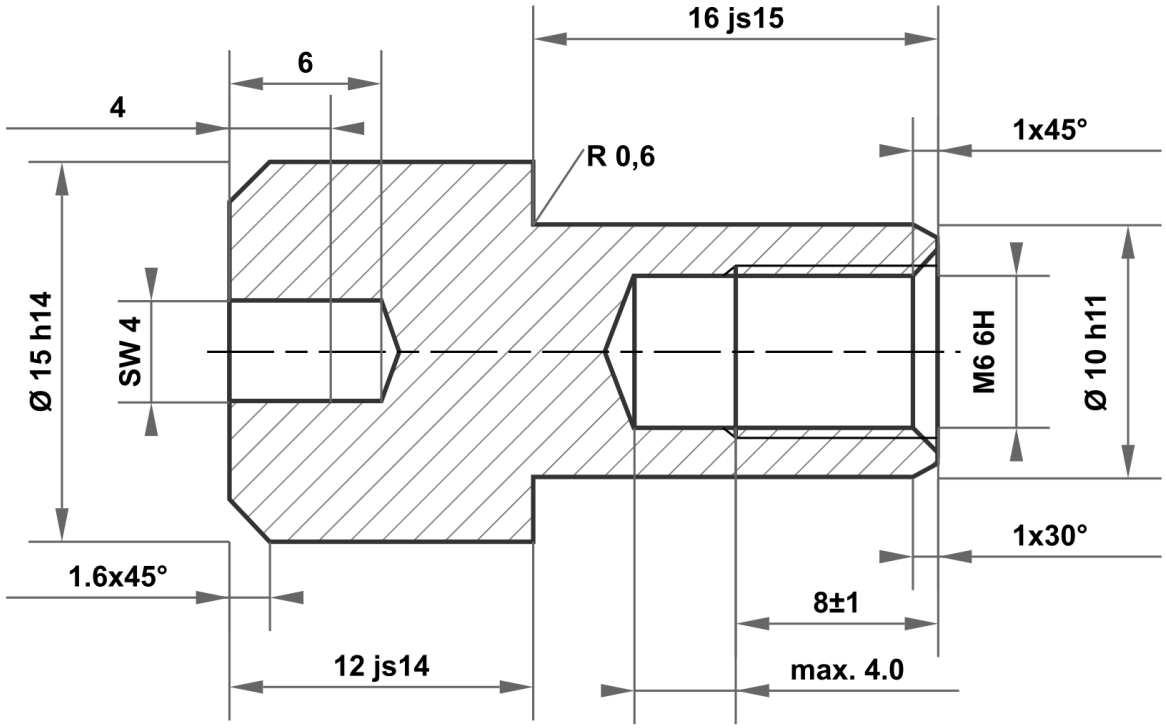


| | |
|---|---|
| 16 js15 | 16.350<br>15.650 |
| 10 h11 | 10.000<br>9.910 |
| 15 h14 | 15.000<br>14.570 |
| 12 js14 | 12.215<br>11.785 |

Permitted deviation for dimensions without tolerance specification
ISO 2768-m for linear and angular dimensions
ISO 2768-0.6 for symmetry

Surface
bright

Scale

Weight

Material 1.4404 (X2CrNiMo17-12-2)

| | | | | | Date | Name |
|---|---|---|---|---|---|---|
| | | | | Drawn | 03.02.2026 | mboShop |
| | | | | Checked | | |
| | | | | Standard | | |
| A | Drawing created | 03.02.2026 | eShop | | | |
| Status | Changes | Date | Name | | | |

Identifier

Sleeve nut

Article no
KT601770101506

A4

mbo Osswald GmbH & Co KG
Steingasse 13
97900 Kuelsheim-Steinbach
Germany

Replacement for:

Replaced by: