This drawing is the exclusive property of mbo Osswald GmbH & Co KG. Communication, reproduction and disclosure to third-parties (even if only partial) are prohibited. Any contravention will result in liability for compensation.

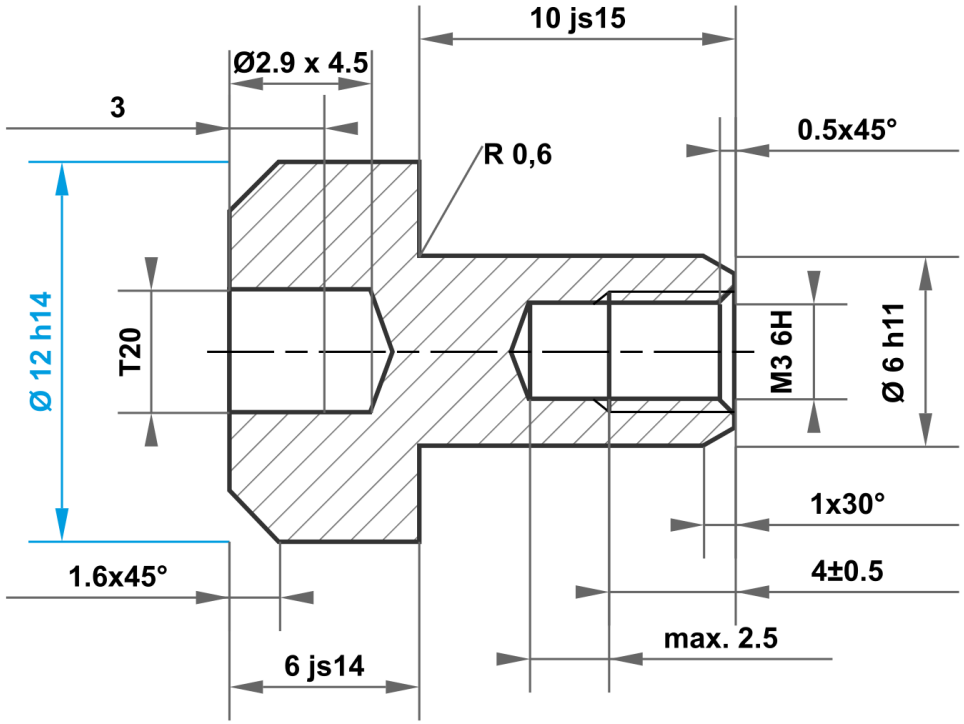

10 js15	10.290 9.710
6 h11	6.000 5.925
12 h14	12.000 11.570
6 js14	6.150 5.850

Permitted deviation for dimensions without tolerance specification
ISO 2768-m for linear and angular dimensions
ISO 2768-0.6 for symmetry

Surface
bright

Scale

Weight

Material 1.4305 (X8CrNiS18-9)

	Date	Name
Drawn	24.02.2026	mboShop
Checked		
Standard		

Identifier

Sleeve nut

Status	Changes	Date	Name
A	Drawing created	24.02.2026	eShop

mbo Osswald GmbH & Co KG
Steingasse 13
97900 Kuelsheim-Steinbach
Germany

Article no
KT911771942008

A4

Replacement for:

Replaced by: